Heathkit Model C-3 Capacitor Checker

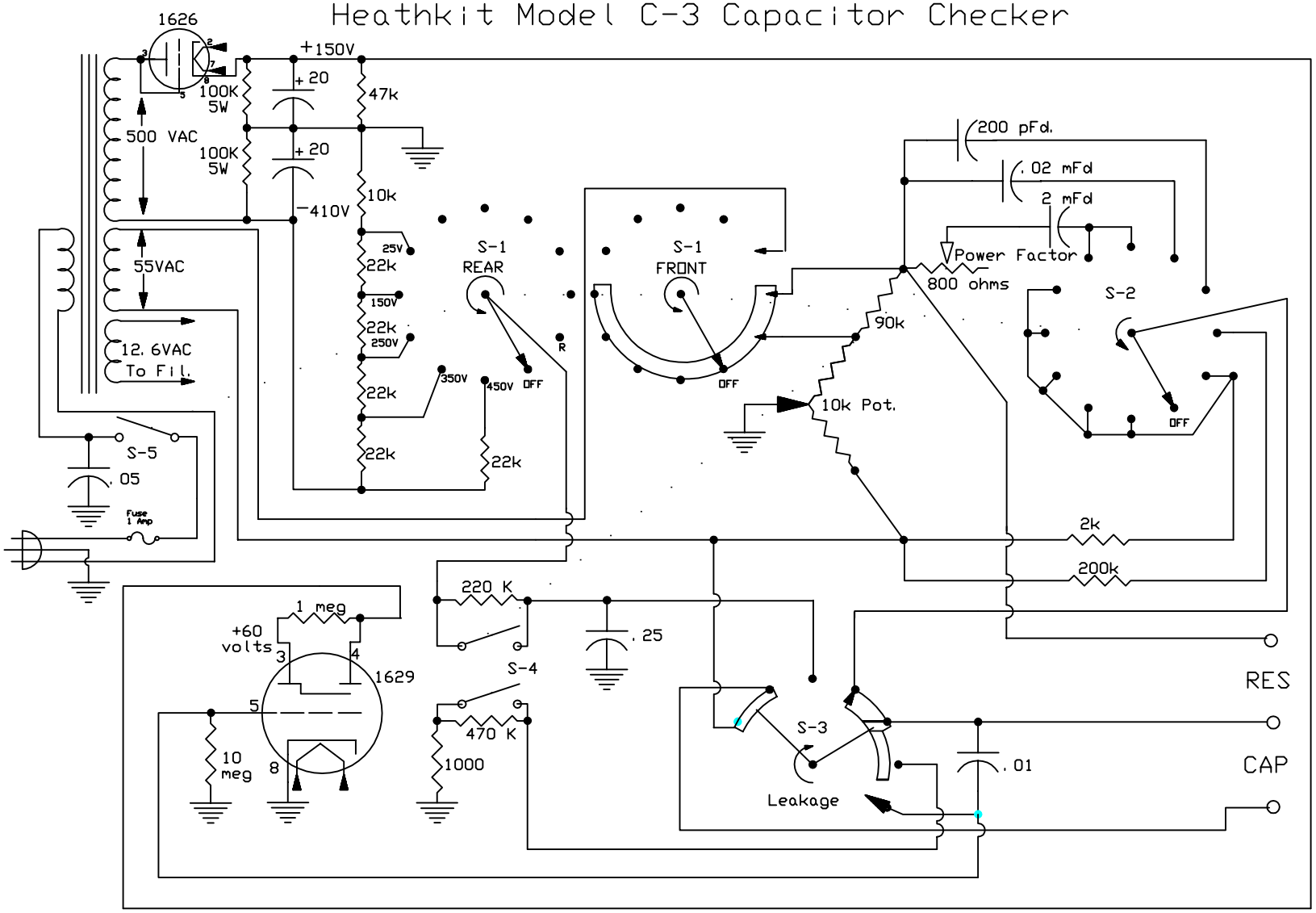

S-1 is rear section main switch. S-2 is front section of main switch. S-3 is Leakage switch. S-4 is on rear of Power Factor Control. S-5 is power switch, mounted on rear of main switch. All switches, except S-4 shown in normal (Off) posistion.